State of New Hampshire
Division of Procurement and Support Services
Bureau of Purchase and Property
25 Capitol Street, State House Annex
Concord, NH 03301-6398

Date: **7/29/16**

Bid No.: **18-17**

Date of Bid Opening: **8/11/16**
Time of Bid Opening: **10:15 AM (EST)**

YOU MAY EMAIL YOUR BID TO ALAN HOFMANN AT: EMAIL PRCHWEB@NH.GOV

BID INVITATION FOR: BLADES, TUNGSTEN CARBIDE SNOW PLOW

[Insert name of signor]_____, on behalf of _____ [insert name of entity submitting bid (collectively referred to as "Vendor") hereby submits an offer as contained in the written bid submitted herewith ("Bid") to the State of New Hampshire in response to BID #18 -17 at the price(s) quoted herein in complete accordance with the bid.

Vendor attests to the fact that:

1. The Vendor has reviewed and agreed to be bound by the Bid.
2. The Vendor has not altered any of the language or other provisions contained in the Bid document.
3. The Bid is effective for a period of 180 days from the Bid Opening date as indicated above.
4. The prices Vendor has quoted in the Bid were established without collusion with other vendors.
5. The Vendor has read and fully understands this Bid.
6. Further, in accordance with RSA 21-I:11-c, the undersigned Vendor certifies that neither the Vendor nor any of its subsidiaries, affiliates or principal officers (principal officers refers to individuals with management responsibility for the entity or association):
   a. Has, within the past 2 years, been convicted of, or pleaded guilty to, a violation of RSA 356:2, RSA 356:4, or any state or federal law or county or municipal ordinance prohibiting specified bidding practices, or involving antitrust violations, which has not been annulled;
   b. Has been prohibited, either permanently or temporarily, from participating in any public works project pursuant to RSA 638:20;
   c. Has previously provided false, deceptive, or fraudulent information on a vendor code number application form, or any other document submitted to the state of New Hampshire, which information was not corrected as of the time of the filing a bid, proposal, or quotation;
   d. Is currently debarred from performing work on any project of the federal government or the government of any state;
   e. Has, within the past 2 years, failed to cure a default on any contract with the federal government or the government of any state;
   f. Is presently subject to any order of the department of labor, the department of employment security, or any other state department, agency, board, or commission, finding that the applicant is not in compliance with the requirements of the laws or rules that the department, agency, board, or commission is charged with implementing;
   g. Is presently subject to any sanction or penalty finally issued by the department of labor, the department of employment security, or any other state department, agency, board, or commission, which sanction or penalty has not been fully discharged or fulfilled;
   h. Is currently serving a sentence or is subject to a continuing or unfulfilled penalty for any crime or violation noted in this section;
   i. Has failed or neglected to advise the division of any conviction, plea of guilty, or finding relative to any crime or violation noted in this section, or of any debarment, within 30 days of such conviction, plea, finding, or debarment; or
   j. Has been placed on the debarred parties list described in RSA 21-I:11-c within the past year.

This document must be signed by a person who is authorized to legally obligate the responding vendor. A signature on this document indicates that all State of New Hampshire terms and conditions are accepted by the responding vendor and that any and all other terms and conditions submitted by the responding vendor are null and void, even if such terms and conditions have terminology to the contrary. The responding vendor shall also be subject to State of New Hampshire terms and conditions as stated on the reverse of the purchase order.

Authorized Signor's Signature _____ **Authorized Signor's Title** _____

NOTARY PUBLIC/JUSTICE OF THE PEACE

COUNTY: _____ **STATE:** _____ **ZIP:** _____

On the _____ day of _____, 2016, personally appeared before me, the above named _____, in his/her capacity as authorized representative of _____, known to me or satisfactorily proven, and took oath that the foregoing is true and accurate to the best of his/her knowledge and belief.

In witness thereof, I hereunto set my hand and official seal.

_____ **(Notary Public/Justice of the Peace)**

My commission expires: _____ **(Date)**

Form P31-A

Unless specifically amended or deleted by the Division of Procurement and Support Services, the following General Terms and Conditions apply to this Bid and any resulting Purchase Order or Contract.

GENERAL CONDITIONS AND INSTRUCTIONS:

NATURE OF, AND ELIGIBILITY TO RESPOND. This bid invitation is submitted in accordance with Chapter 21-1, and rules promulgated thereunder, and constitutes a firm and binding offer. A bid may not be withdrawn unless permission is obtained from the Bureau of Purchase and Property.

Bids may be issued only by the Bureau of Purchase and Property and are not transferable.

SAMPLES AND DEMONSTRATIONS. When samples are required they must be submitted free of costs and will not be returned. Items left for demonstration or evaluation purposes shall be delivered and installed free of charge and shall be removed at no cost to the State. Demonstration units shall not be offered to the State as new equipment.

BIDS. Bids must be received at the Bureau of Purchase and Property before the date and time specified for the opening. Bids must be submitted on this bid form or exact copies and must be typed or clearly printed in ink. Corrections must be initialed. Bids are to be made less Federal Excise Tax and no charge for handling unless required by law.

SPECIFICATIONS. Vendors must submit on items as specified. Proposed changes must be submitted in writing and received at the Bureau of Purchase and Property at least five (5) business days prior to the bid opening, unless otherwise specified in the RFB timeline. Vendors shall be notified in writing if any changes to the specifications are made.

AWARD. The award will be made to the responsible Vendor submitting a conforming bid meeting specifications at the lowest cost unless other criteria are noted in the bid. Unless otherwise noted, the award may be made by individual items.

If there is a discrepancy between the unit price and the extension, the unit price will prevail.

When identical low bids are received the award will be made in accordance with the Administrative Rules.

Discounts will not be considered in making award but may be offered on the Invoice for earlier payment and will be applicable on the date of completion of delivery or receipt of Invoice, whichever is later. On orders specifying split deliveries, discounts will apply on the basis of each delivery or receipt of Invoice, whichever is later.

PATENT INFRINGEMENT. Any responding vendor who has reason to believe that any other responding vendor will violate a patent should such responding vendor be awarded the contract shall set forth in writing, prior to the date and time of opening, the grounds for his belief and a detailed description of the patent.

ASSIGNMENT PROVISION. The responding vendor hereby agrees to assign all causes of action that it may acquire under the antitrust laws of New Hampshire and the United States as the result of conspiracies, combinations, or contracts in restraint of trade which materially affect the price of goods or services obtained by the state under this contract if so requested by the State of New Hampshire.

FEDERAL FUNDS. This Division of Plant and Property Management, under RSA 21-1:14, VIII shall assure the continuation or granting of federal funds or other assistance not otherwise provided for by law by following the Federal Procurement Standards.

STATE'S OPTIONS: The Bureau of Purchase and Property reserves the right to reject or accept all or any part of any bid, to determine what constitutes a conforming bid, to award the bid solely as it deems to be in the best interest of the State, and to waive irregularities that it considers not material to the bid.

PUBLIC INFORMATION: The responding vendor hereby acknowledges that all information relating to this bid and any resulting order (Including but not limited to fees, contracts, agreements and prices) are subject to these laws of the State of New Hampshire regarding public information.

PERSONAL LIABILITY: The responding vendor agrees that in the preparation of this bid or the execution of any resulting contract or order, representatives of the State of New Hampshire shall incur no liability of any kind.

PROOF OF COMPLIANCE. The responding vendor may be required to supply proof of compliance with proposal specifications. When requested, the responding vendor must immediately supply the Bureau of Purchase and Property with certified test results or certificates of compliance. Where none are available, the State may require independent laboratory testing. All costs for such testing certified test results or certificate of compliance shall be the responsibility of the responding vendor.

FORM OF CONTRACT. The terms and conditions set forth in any additional Terms and Conditions by the Bureau of Purchase and Property are part of the bid and will apply to any contract awarded the responding vendor unless specific exceptions are taken and accepted and will prevail over any contrary provisions in Terms and Conditions submitted by the responding vendor.

CONTRACT TERMS AND CONDITIONS

1. The State of New Hampshire, acting through the Division of Procurement and Support Services, engages the firm or individual ("the Vendor") to perform the services and/or sale of goods, described in the attached State documents, if any, and the Vendor's bid or quotation, both of which are incorporated herein by reference.

2. COMPLIANCE BY VENDOR WITH LAWS AND REGULATIONS. In connection with the performance of this agreement, the Vendor shall comply with all statutes, laws, regulations, and orders of federal, state, county or municipal authorities which shall impose any obligation or duty upon the Vendor, including, but not limited to civil rights and equal opportunity laws.

3. TERM. The contract, and all obligations of the parties thereunder, shall become effective on a specified date and shall be completed in their entirety prior to a specified date. Any work undertaken by the Vendor prior to the effective date shall be at his sole risk and, in the event that the contract shall not become effective, the State shall be under no obligation to reimburse the Vendor for any such work.

4. CONTRACT PRICE. The contract price, a payment schedule and a maximum limitation of price shall be as specified by the bid invitation and the Vendor's bid. All payments shall be conditioned upon receipt, and approval by the State, of appropriate vouchers and upon satisfactory performance by the Vendor, as determined by the State. The payment by the State of the Contract Price shall constitute complete reimbursement to the Vendor for all expenses of any nature incurred by the Vendor in the performance by the Vendor and complete payment for the Services. The State shall have no other liability to the Vendor.

5. DELIVERY. If the vendor fails to furnish items and/or services in accordance with all requirements, including delivery, the state may re-purchase similar items from any other source without competitive bidding, and the original vendor may be liable to the state for any excess costs.

6. INVOICING. All invoices must be in triplicate showing Order Number, Unit and Extension Prices and discounts allowed. A separate invoice shall be submitted for each order. Unless otherwise noted on the invitation to bid or purchase order, payment will not be due until thirty (30) days after all services have been completed, or all items have been delivered, inspected and accepted or the invoice has been received at the agency business office, whichever is later.

7. PERSONNEL.
7.1. The Vendor shall disclose in writing the names of all owners (5% or more), directors, officers, employees, agents or subcontractors who are also officials or employees of the State of New Hampshire. Any change in this information shall be reported in writing within fifteen (15) days of their occurrence.

7.2. The person signing this agreement on behalf of the State, or his or her delegee ("Contracting Officer") shall be the State's representative for purposes of this agreement. In the event of any dispute concerning the interpretation of this agreement, the Contracting Officer's decision shall be final.

8. EVENT OF DEFAULT; REMEDIES.
8.1. Any one or more of the following acts or omissions of the Vendor shall constitute an event of default hereunder ("Events of Default"):

8.1.1. failure to deliver the goods or services satisfactorily or on schedule; or

8.1.2. failure to submit any report required hereunder; or

8.1.3. failure to perform any of the other covenants and conditions of this agreement.

8.2. Upon the occurrence of any Event of Default, the State may take any one, or more, or all, of the following actions:

8.2.1. give the Vendor a written notice specifying the Event of Default and requiring it to be remedied within, in the absence of a greater or lesser specification of time, thirty (30) days from the date of the notice; and if the Event of Default is not timely remedied, terminate this agreement, effective two (2) days after giving the Vendor notice of termination; and

8.2.2. give the Vendor a written notice specifying the Event of Default and suspending all payments to be made under this agreement and ordering that the portion of the Contract Price, which would otherwise accrue to the Vendor during the period from the date of such notice until such time as the State determines that the Vendor has cured the Event of Default, shall never be paid to the Vendor; and

8.2.3. set off against any other obligation the State may owe to the Vendor any damages the State suffers by reason of any Event of Default; and

8.2.4. treat the agreement as breached and pursue any of its remedies at law or in equity, or both.

9. WAIVER OF BREACH. No failure by the State to enforce any provisions hereof after any Event of Default shall be deemed a waiver of its rights with regard to that Event, or any subsequent Event. No express failure of any Event of Default shall be deemed a waiver of any provision hereof. No such failure or waiver shall be deemed a waiver of the right of the State to enforce each and all of the provisions hereof upon any further or other default on the part of the Vendor.

10. VENDOR'S RELATION TO THE STATE. In the performance of this agreement the Vendor is in all respects an independent Vendor, and is neither an agent nor an employee of the State. Neither the Vendor nor any of its officers, employees, agents or members shall have authority to bind the State nor are they entitled to any of the benefits, workmen's compensation or emoluments provided by the State to its employees.

11. ASSIGNMENT AND SUBCONTRACTS. The Vendor shall not assign, or otherwise transfer any interest in this agreement without the prior written consent of the State. No work required by this contract shall be subcontracted without the prior written consent of the State.
If a vendor is unable to complete delivery by the date specified, he must contact the using agency. However, the agency is not required to accept a delay to the original delivery date. All deliveries are subject to inspection and receiving procedure rules as established by the State of New Hampshire. Deliveries are not considered accepted until compliance with these rules has been established. State personnel signatures on shipping documents shall signify only the receipt of shipments. All deliveries shall be FOB Destination.

12. INDEMNIFICATION. The contractor shall defend, indemnify and hold harmless the State, its officers and employees, from and against any and all losses suffered by the State, its officers and employees, and any and all claims, liabilities or penalties asserted against the State, its officers and employees, by or on behalf of any person, on account of, based on, resulting from, arising out of (or which may be claimed to arise out of) the acts or omissions of the Vendor. Notwithstanding the foregoing, nothing herein contained shall be deemed to constitute a waiver of the sovereign immunity of the State, which immunity is hereby reserved to the State. This covenant shall survive the termination of this agreement.

12.1 PATENT PROTECTION. The seller agrees to indemnify and defend the State of New Hampshire from all claims and losses resulting from alleged and actual patent infringements and further agrees to hold the State of New Hampshire harmless from any liability arising under RSA 382-A:2-312(3). (Uniform Commercial Code).

13. TOXIC SUBSTANCES. In compliance with RSA 277-A known as the Workers Right to Know Act, the vendor shall provide Material Safety Data Sheets with the delivery of any and all products covered by said law.

14. NOTICE. Any notice by a party hereto to the other party shall be deemed to have been duly delivered or given at the time of mailing by certified mail, postage prepaid, in a United States Post Office addressed to the parties at the addresses given below.

15. AMENDMENT. This agreement may be amended, waived or discharged only by an instrument in writing signed by the parties hereto.

16. CONSTRUCTION OF AGREEMENT AND TERMS. This agreement shall be construed in accordance with the laws of the State of New Hampshire, and is binding upon and inures to the benefit of the parties and their respective successors and assigns.

17. ADDITIONAL PROVISIONS. The additional provisions (if any) have been set forth as Exhibit "A" hereto.

18. ENTIRE AGREEMENT. This agreement, which may be executed in a number of counterparts, each of which shall be deemed an original, constitutes the entire agreement and understanding between the parties, and supersedes all prior agreements and understandings relating hereto.

BID INVITATION FOR: BLADES, TUNGSTEN CARBIDE SNOW PLOW

PURPOSE:
The purpose of this bid invitation is to establish a contract(s) in the form of a purchase order(s) for supplying the State of New Hampshire with the item(s) indicated in the "Offer" section of this bid invitation, in accordance with the requirements of this bid invitation and any resulting order. This will be a one-time order with delivery required to the locations indicated in the F.O.B. section of this bid invitation.

INSTRUCTIONS TO VENDOR:
Read the entire bid invitation prior to filling it out. Complete the pricing information in the "Offer" section (detailed information on how to fill out the pricing information can be found in the "Offer" section); complete the "Vendor Contact Information" section; and finally, fill out, sign, and notarize page 1 of the bid invitation.

BID SUBMITTAL:
All bids must be submitted on this form or an exact copy, must be typed or clearly printed in ink and must be received on or before the date and time specified on page 1 of this bid under "Bid closing". Interested parties may submit a bid to the State of New Hampshire Bureau of Purchase and Property by **email to PRCHWEB@NH.GOV**. All bids must be clearly marked with bid number, date due and purchasing agent's name.

IF YOU ARE EXPERIENCING DIFFICULTIES EMAILING YOUR BID OR YOU WISH TO VERIFY THAT YOUR BID RESPONSE HAS BEEN RECEIVED, PLEASE CALL (603) 271-2201 AND ASK A PURCHASING ASSISTANT FOR ASSISTANCE OR TO CHECK ON THE STATUS OF YOUR BID RESPONSE.

TIMELINE:
The timeline below is provided as a general guideline and is subject to change. Unless stated otherwise, consider the dates below a "no later than" date.

8/1/2016	Bid Solicitation distributed on or by
8/5/2016	Last day for questions, clarifications, and/or requested changes to bid
8/11/2016	10:15 (EST) AM Bid Opening
8/15/2016	Estimated Notification(s) of Award to apparent low bidders

GOVERNING TERMS AND CONDITIONS:
A responding bid that has been completed and signed by your representative will constitute your company's acceptance of all State of New Hampshire terms and conditions and will legally obligate your company to these terms and conditions.

A signed response further signifies that from the time the bid is published (bid solicitation date and time) until a contract is awarded, no bidder shall offer or give, directly or indirectly, any gift, expense reimbursement, or honorarium, as defined by RSA 15-B, to any elected official, public official, public employee, constitutional official, or family member of any such official or employee who will select, evaluate, or award the RFB.

Furthermore, a signed response signifies that any terms and/or conditions that may be or have been submitted by the Vendor are specifically null and void and are not a part of this bid invitation or any awarded purchase order, even if said terms and/or conditions contain language to the contrary.

PUBLIC DISCLOSURE OF BID OR PROPOSAL SUBMISSIONS:
Generally, the full contents of any bid or proposal (including all materials submitted in connection with it, such as attachments, exhibits and addenda) become public information upon completion of final contract or purchase order negotiations with the selected vendor. Certain information concerning bids or proposals, including but not limited to pricing or scoring, is generally available to the public even before this time, in accordance with the provisions of RSA 21-G: 37.

To the extent consistent with applicable state and federal laws and regulations, as determined by the State, including, but not limited to, RSA Chapter 91-A (the "Right-to-Know" Law), the State will, after final negotiations with the selected vendor are complete, attempt to maintain the confidentiality of portions of a bid or proposal that are clearly and properly marked by a Vendor as confidential. Any and all information contained in or connected to a bid or proposal that a Vendor considers confidential must be clearly designated in the following manner:

1. If the Vendor considers a portion of a page of a submission confidential, it shall highlight those portions of the page in yellow and note "confidential" beside the highlighting. Use of any other term, such as "proprietary", "not for public use", or "for client's use only", is *not* acceptable.

2. If a Vendor considers one or more full pages of a submission confidential, it may either highlight and mark those pages as noted above or, in the alternative, place those pages in a separate envelope marked "confidential," clearly noting to which section or part of the bid or proposal the segregated materials pertain.

You must also provide a letter to the person listed as the point of contact for this RFB or RFP, identifying the specific page number and section of the information you consider to be confidential information and provide your rationale for each designation.

The State shall have no obligation to maintain the confidentiality of any portion of a bid, proposal or related material, which is not marked in accordance with the foregoing provisions. It is specifically understood and agreed that the Vendor waives any claim of confidentiality as to any portion of a response to this RFB or RFP that is not marked as indicated above, and that unmarked (or improperly marked) submissions may be disseminated to any person, without limitation. Marking an entire bid, proposal, attachment or full sections thereof confidential without taking into consideration the public's right to know will neither be accepted nor honored by the State. Bids or proposals submitted with markings not in conformity with the foregoing provisions of this request for submission, or submitted without an explanation of the Vendor's rationale for a confidentiality designation, may be deemed not to comply with the requirements of the bid or proposal (subject to correction and cure).

Notwithstanding any provision of this request for submission to the contrary, proposed pricing will be subject to public disclosure REGARDLESS of whether or not marked as confidential.
If a request is made to the State by any person or entity to view or receive copies of any portion of a proposal and if disclosure is not prohibited under RSA 21-G:37 or any other applicable law or regulation, Vendors acknowledge and agree that the State may disclose any and all portions of the proposal or related materials which is not marked as confidential. In the case of bids, proposals or related materials that contain portions marked confidential, the State will assess what information it believes is subject to release; notify the Vendor that the request has been made; indicate what, if any, portions of the proposal or related material will not be released; and notify the Vendor of the date it plans to release the materials. The State is not obligated to comply with a Vendor's designation regarding confidentiality.

By submitting a bid or proposal, the Vendor agrees that unless it obtains and provides to the State, prior to the date specified in the notice described in the paragraph above, a court order valid and enforceable in the State of New Hampshire, at its sole expense, enjoining the release of the requested information, the State may release the information on the date specified in the notice without any liability to the Vendor.

Notwithstanding RSA 91-A:4, no information shall be available to the public, or to the members of the general court or its staff concerning specific responses to this bid invitation from the time this bid is published until the closing date for responses.

From the closing date of the bid until the award is made is considered "quiet time." Bidders may not discuss their bid or anything specifically pertaining to the bid with any State entity (other than personnel from the Bureau of Purchase and Property) including the requesting/customer agency(ies). If found in violation of this part, the bidder shall be found non-compliant and will no longer be allowed to proceed in the award process.

VENDOR CERTIFICATIONS:
All Vendors must be duly registered as a vendor authorized to conduct business in the State of New Hampshire.

- STATE OF NEW HAMPSHIRE VENDOR APPLICATION: Prior to bid award, Vendors must have a completed Vendor Application Package on file with the NH Bureau of Purchase and Property. See the following website for information on obtaining and filing the required forms (no fee: *https://DAS.NH.Gov/Purchasing*

- CONFIDENTIALITY & CRIMINAL RECORD: If Applicable, by the using agency, the Vendor will have signed by each of employees or its approved sub-contractor(s), if any, working in the office or externally with the State of New Hampshire records a Confidentiality form and Criminal Record Authorization Form. These forms shall be returned to the individual using agency prior to the start of any work.

REQUEST FOR CHANGES AND/OR CLARIFICATION:
Any Questions must be submitted by an individual authorized to commit their organization to the Terms and Conditions of this bid. Submissions must clearly identify the bid Number, the Vendor's name and address and the name of the person submitting the question. Any questions, clarifications, and/or requested changes must be received in writing at the Bureau of Purchase and Property no later than 4:00 PM as listed in the timeline above. Questions shall not be submitted to anyone other than the Purchasing Agent or his/her representative. Bidders that submit questions verbally or in writing to any other State entity or State personnel shall be found in violation of this part and may be found non-compliant.

Questions must be submitted by E-mail to Alan Hofmann at the following address: alan.hofmann@nh.gov

ADDENDA:
In the event it becomes necessary to add to or revise any part of this bid prior to the scheduled submittal date, the NH Bureau of Purchase and Property will post on our web site any Addenda. Before your submission and periodically prior to the RFB closing, **check the site for any addenda** or other materials that may have been issued affecting the bid. The web site address is *https://das.nh.gov/Purchasing/vendorresources.asp.*

WARRANTY REQUIREMENTS:
Successful Vendor shall be required to warranty all of the equipment awarded to Vendor for a period of not less than the manufacturer's standard period of time from the date the items are received, inspected and accepted by the State of New Hampshire. The warranty shall cover 100% of all parts, shipping, labor, travel, lodging and expenses.

BID PRICES:
Bid prices must be in US dollars and must include delivery and all other costs required by this bid invitation. Special charges, surcharges, or fuel charges of any kind (by whatever name) may not be added on at any time. Any and all charges **must be built into your bid price** at the time of the bid.

Per Administrative Rule 606.01(e) "if there is a discrepancy between the unit price and the extension price in a response to an RFP, RFB or RFQ, the unit price shall be binding upon the vendor".

PAYMENT:
Payments shall be made via ACH. Use the following link to enroll with the State Treasury:
https://www.nh.gov/treasury

AWARD:
The award shall be made to the responsible Vendor meeting the criteria established in this RFB and providing the lowest cost in total. The State reserves the right to reject any or all bids or any part thereof and add/delete locations to the contract price. If an award is made it shall be, in the form of a State of New Hampshire Purchase Order.

BID RESULTS:
Bid results may be viewed when available, once the award has been made, on our web site only at: https://das.nh.gov/purchasing.

For Vendors wishing to attend the bid Opening: **Names of the Vendors submitting responses and pricing will be made public**.

TERMINATION:
The State of New Hampshire shall have the right to terminate the purchase contract at any time by giving the successful Vendor a thirty (30) day written notice.

RETURNED GOODS:
The successful Vendor must resolve all order and invoice discrepancies within five business days from notification. Products returned due to quality issues, duplicate shipments, over-shipments, etc. must be picked up by the successful Vendor within ten business days of notification with no restocking or freight charges, and must be replaced with specified products or the agency will be refunded/credited for the full purchase price. Unauthorized substitutions for any products are not allowed.

Standard stock products ordered in error by the State of New Hampshire must be returned for full credit within fifteen business days of receipt. Products must be in re-saleable condition (original container, unused) and there will be no restocking fee charged for these products. The using agency will be responsible for any freight charges to return these items to the successful Vendor.

SPECIFICATION COMPLIANCE:

The manufacturers and/or mode(s indicated in this bid are equivalent to the type and quality required. You may bid different makes and models; however, your offer must match or exceed the one(s) indicated and you must demonstrate to the satisfaction of the purchasing Agency that they meet or exceed the minimum standards. Items that don't meet the minimum standards will not be accepted**. MANUFACTURER'S NOT LISTED MUST SUBMIT PRODUCT LITERATURE AND SPECIFICATIONS BEFORE 4:00PM ON AUGUST 5, 2016**

Unless otherwise specified by the Bureau of Purchase and Property in this bid invitation document, all products and equipment offered by the Vendor must be new (and of the current model year, if applicable); shall not be used, rebuilt, refurbished; shall not have been used as demonstration products and equipment, and shall not have been placed anywhere for evaluation purposes.

F.O.B.:
The F.O.B. shall be destination to the following delivery point:

AS PER THE NH DOT DELIVERY LOCATIONS LISTED FOR THE ALL DISTRICTS

REQUISITION NO.: 167516

OFFER:
Successful Vendor hereby offers to sell the required items to the State of New Hampshire at the following price(s):

RIDGID CARBIDE PLOW BLADES AS PER THE FOLLOWING MINIMUM
DEPARTMENT OF TRANSPORTATION SPECIFICATIONS

Qty	Unit	Description	Delivered Prices Unit	Delivered Prices Extension
80	EACH	NEW, 28C ¾"X6"X28" 25 DEGREE QTY OF 50 TO DISTRICT ONE QTY OF 25 TO DISTRICT THREE QTY OF 5 TO DISTRICT SIX	$ _____	$ _____
100	EACH	NEW, 40C ¾"X6"X40" 25 DEGREE QTY OF 100 TO DISTRICT ONE	$ _____	$ _____
371	EACH	NEW, 44C ¾"X6"X44" 25 DEGREE QTY OF 100 TO DISTRICT TWO QTY OF 50 TO DISTRICT THREE QTY OF 200 TO DISTRICT FIVE QTY OF 21 TO DISTRICT SIX	$ _____	$ _____
736	EACH	NEW, 44E ¾"X6"X44" 25 DEGREE QTY OF 300 TO DISTRICT ONE QTY OF 400 TO DISTRICT FIVE QTY OF 36 TO DISTRICT SIX	$ _____	$ _____
72	EACH	NEW, 12" O/C HOLES 48" QTY OF 60 TO DISTRICT FIVE QTY OF 12 TO DISTRICT SIX	$ _____	$ _____
36	EACH	NEW, 12" O/C HOLES 36" QTY OF 30 TO DISTRICT FIVE QTY OF 6 TO DISTRICT SIX	$ _____	$ _____

TOTAL ALL $ _____

Make and model _____
Bidder to submit detailed manufacturers specifications/literature

DELIVERY TIME:
Note: Delivery is to be accomplished no later than 90 days ARO. However delivery will be accepted sooner

REQUISITION NO.: FISCAL YEAR 17

F.O.B.:
The F.O.B. shall be destination to the following delivery point:

NH DEPARTMENT OF TRANSPORTATION
BUREAU OF TURNPIKES
36 HACKETT HILL ROAD
HOOKSETT NH 03106

RIDGID CARBIDE PLOW BLADES AS PER THE FOLLOWING MINIMUM
DEPARTMENT OF TRANSPORTATION SPECIFICATIONS

QTY	UNIT	DESCRIPTION	DELIVERED PRICE UNIT $	EXTENSION $
15	EACH	NEW, ITEM #1.1 28C ¾"X6"X28" 25 DEGREE	$	$
18	EACH	NEW, ITEM # 1.2 40C ¾"X6"X40" 25 DEGREE	$	$
70	EACH	NEW, ITEM # 1.3 44C ¾"X6"X44" 25 DEGREE	$	$
220	EACH	NEW, ITEM # 1.4 44E ¾"X6"X44" 25 DEGREE	$	$

TOTAL ALL $ _____

Make and model _____
Bidder to submit detailed manufacturers specifications/literature

DELIVERY TIME:
Note: Delivery is to be accomplished no later than 90 days ARO. However delivery will be accepted sooner.

VENDOR CONTACT INFORMATION:
The following information is for this office to be able to contact a person knowledgeable of your bid response, and who can answer questions regarding it:

Contact Person	Telephone Number	Toll Free Telephone Number
Fax Number	E-mail Address	Company Website

Vendor Company Name

Vendor Address

Requisition# 157456
Date: 6/29/16
Fiscal Year 20176PO#

Delivery Locations for NH DOT

Highway Maintenance Districts

DISTRICT	DELIVERY LOCATION / CONTACT PERSON	TELEPHONE
District 1	**c/o John Ross Jr.** NHDOT Patrol Shed 107 W – Whitefield 24 Foster Drive Whitefield, NH 03598	603-788-4641 603-631-9151 (Cell)
District 2	**c/o Ralph Carter, Maintenance Supervisor** Exit 16, I-89 8 Eastman Hill Road Enfield, NH 03748	603-448-2654
District 3	**c/o Andrew Dame, Warehouse Supervisor** District Three Patrol Shed Warehouse 310 710 Whittier Highway (Route 25) Moultonborough NH 03254	603-524-6667 603-419-0810
District 4	**c/o Robert Hebert, Warehouse Supervisor** 19 Base Hill Road Swanzey, NH 03446-3401	603-352-6614 603)419-0406 (Cell)
District 5	**c/o Amy Mansfield, Warehouse Supervisor** District Five Patrol Shed 511 6 East Point Drive Bedford, NH 03110	603-666-3336
District 6	**c/o Michael Lavoie or Ken Mailhot, Maintenance Supervisors** District Six Patrol Shed 608 78 Coffin Rd Epping NH (Route 125 Epping adjacent to Motor Vehicle/State Police)	603-868-1133

Fiscal Year: 2017
Requisition No: 167516
Date: 7/5/2016

Mark Kirouac, Assistant State Maintenance Engineer
Bureau of Highway Maintenance
New Hampshire Department of Transportation

SPECIFICATION
Carbide Tipped Plow Blades

See attached drawing and specification dated March 16, 1995, and June 26, 2008, respectively.

NOTE: Each shipping pallet to contain only blades of one patrol section number.

These are three qualified bidders:

Bucyrus Blades, Inc.	Kennametal, Inc.	Winter Equipment Company, Inc
260 East Beal Ave.	1 Lloyd Ave., PO Box 231	900 Joseph Lloyd Parkway
Bucyrus, OH 44820	Latrobe, PA 15650	Willoughby OH 44094
Gary Parker (419) 562-6015	Terry Manway (412) 539-5164	Nate Kallay (800) 294-6837

NEW HAMPSHIRE DEPARTMENT OF TRANSPORTATIONSPECIFICATION

TUNGSTEN CARBIDE TIPPED SNOW PLOW BLADES

1. BLADE

1.1 Blades shall be flat hot-rolled finished steel SAE 1020 of domestic manufacture.

1.2 Punching shall be 11/16" square holes to receive 5/8" diameter carriage bolts. Location and spacing of the holes shall be as shown on the attached drawings.

1.3 The groove for the carbide inserts shall be milled in the center of the blade edge.

1.4 Center of holes shall be in line within 1/32" of established centerline.

2. TUNGSTEN CARBIDE INSERTS

2.1 The inserts shall be WC grade of tungsten carbide with 11% to 12% cobalt content.

Density: 14.1 minimum to 14.6 maximum.

Hardness: 87.5 minimum to 89.0 maximum Rockwell "A" Scale.

Transverse Rupture Strength (P.S.I.): 350,000 minimum.

Porosity: (ASTM B276-79) A 06
B 00
C 00

2.3 Insert Design.
The inserts shall be trapezoidal in shape to the following dimensions:

Height: .750 + .005 (Long side)

Width: .365 + .010

Length: 1 in. nominal

Bottom Angle: 25 degrees with a nose radius of 1/16" minimum.

2.4 A metallurgical evaluation of the carbide insert shall show no evidence of cross grade contamination. Evaluation to be based on a photo micrograph of a polished and etched specimen at 500X magnification.

3. BRAZING

3.1 The brazing material shall be a high strength alloy type. The braze shear strength to be 30,000 psi minimum.

3.2 The tungsten carbide inserts shall be positioned in the milled groove at .010 between the inserts the entire length of each cutting edge section.

3.3 The inserts shall be brazed on all sides consistent with sound brazing practice with no evidence of voids or use of shims.

3.4 Each blade section to contain one insert, one-inch nominal length for each inch of blade section length. Reference 2.3.

4. SPECIFIC REQUIREMENTS

4.1 The complete cutting edge shall consist of a combination of three sections with the two end sections interchangeable.

4.2 The difference between the highest and lowest tip point between two adjacent inserts is not to exceed 1/32" on any given blade assembly.

4.3 The finished blade sections shall be free of warpage and longitudinal deviation not to exceed 1/8" in a 44" blade section.

4.4 Each blade section shall be identified with the manufacturer's identification stamp, month and year on each end of the section.

4.5 The finished blade sections shall be given one coat of * “lead free” rust resistant lacquer and with markings showing the front of the blade to avoid improper mounting. However, the carbide edge of the blade section shall not be lacquer coated to allow ready physical inspection.

4.6 Each blade is to be numbered at each end by stamping onto the metal 3/8" letters and numerals either 28C, 40, 44C or 44E as appropriate.

5. SPECIAL PROVISIONS

5.1 The Vendor guarantees the finished product to meet all specifications and to be free from defects in materials and workmanship and that it will perform the work of snow, ice and slush removal when in use on all types of paved surfaces consistent with the New Hampshire Department of Transportation highway system. The Vendor also guarantees to make an adjustment to the New Hampshire Department of Transportation for a period of 30 months after acceptance by the Department on any blade section with 25% or more of wear left in the edge which fails in any of the following respects:

1. Loss of one or more carbide tips.

2. Shattering along the longitudinal plane.

3. Shattering along a plane in or about the line of travel.

Wear on a blade section is defined as follows:

* “Lead free”- shall be consistent with 16 CFR Part 1303,2(b)(2).

The amount of wear on a blade section shall be determined by measuring the depth remaining on the insert nearest each end of the blade section which has not been damaged due to side exposure; taking the average of the depths so measured; and indicating this average depth as a percentage of the depth of an insert as originally mounted in the blade section. The depth measurement will be taken parallel to the plane of the blade section.

5.2 The Vendor's guarantee will not apply when the cause of failure of a blade section can be attributed to negligence on the part of the operator, such as, but not limited to; striking abutments or other obstructions, faulty installation of a blade section; uneven plow balance; or other poor operating practices.

The New Hampshire Department of Transportation warrant in requesting any adjustment on a blade section that:

1. The blade section was used only in the manner ordinarily employed in the removal of snow, ice and slush.

2. The blade section was securely bolted to the moldboard when in use to prevent blade chatter.

3. Inspection was made before each patrol of the blade sections to insure that all bolts were tight.

5.3 Adjustments on blade sections under Paragraph 5.1 subject to the provisions of Paragraph 5.2 will be made by the Vendor as follows:

a. The Vendor will replace without charge any blade section which fails in any respect enumerated before 25% wear has occurred.

b. If blade section failure occurs after 25% of the wear life of the blade has occurred and before 75% of the wear life has occurred, the Vendor will replace the blade section for a charge which is proportional to the amount of service life rendered for the blade section based on the wear which has occurred.

c. There shall be no replacement of, or adjustment on, a blade section which has less than 25% wear life left therein.

5.4 Each blade section on which a claim of adjustment is made will be returned promptly by the New Hampshire Department of Transportation to the Vendor, freight prepaid, with a written claim for adjustment.

The Vendor, upon determining that an adjustment on the blade section is in order, will notify the New Hampshire Department of Transportation that an adjustment is to be made and what charge, if any, is to be made for the adjustment, and will ship promptly the replacement blade section to the New Hampshire Department of Transportation, freight prepaid.

5.5 Prior to award, the apparent low bidder shall submit sample blade section for examination of workmanship acceptability. The blade section submitted by the successful bidder shall be retained by the State as a standard for quality comparison purposes against the delivery quantity. Bidders should note Item 11 of the Bids General Terms and Conditions.

5.6 The apparent low bidder shall submit a shop drawing of the blade sections 5 days after notification they are the apparent low bidder. Prior to the award, the shop drawings must gain the approval of the New Hampshire Department of Transportation, Bureau of Highway Maintenance.

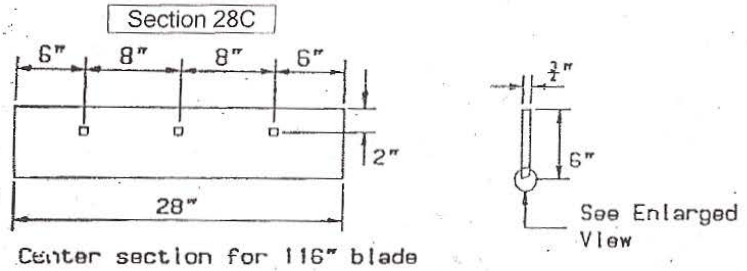

Center section for 116" blade

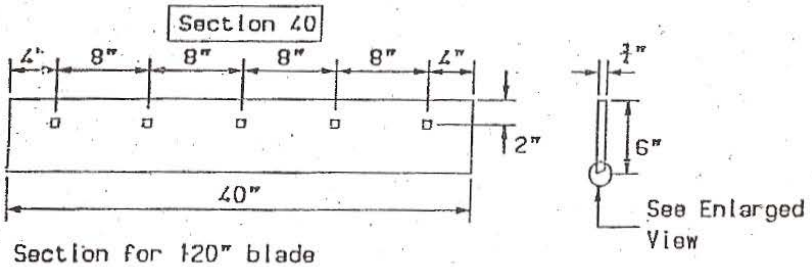

Section for 120" blade

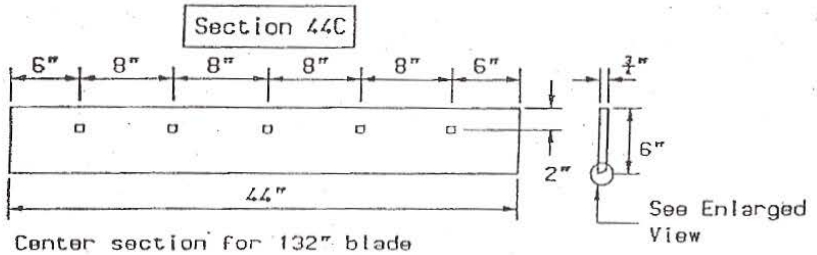

Center section for 132" blade

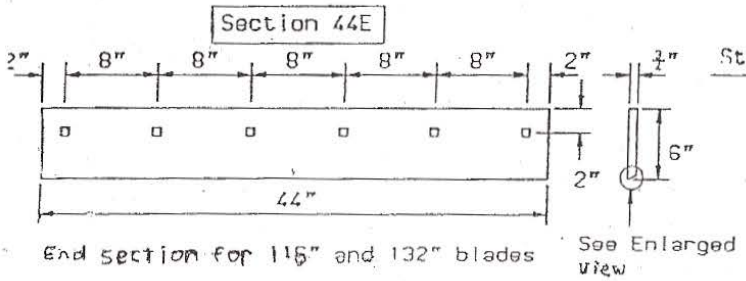

End section for 116" and 132" blades

MATERIAL: S.A.E. 1020 STEEL-HOT ROLLED INSERTS PER DWG.

1. Holes to be 11/16"+- square -- no. of holes req'd per blade is specified per blade detail.
2. Center of holes must be in line within 1/32" of established centerline.
3. CARBIDE inserts brazed on all sides. The difference between the highest and lowest tip point between two adjacent inserts not to exceed 1/32" on any given assembly.
4. Limits and tolerances, unless otherwise specified, not to exceed 1/16".
5. Metal stamp manufacturer name & month & year of manufacture on both ends of blade, along with blade number.

Stamp all blades as shown

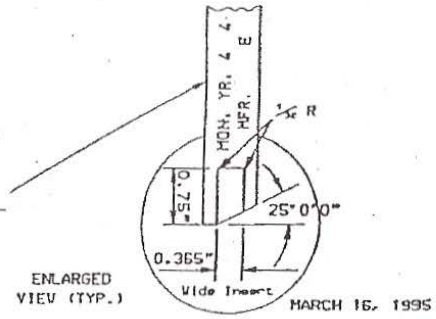

STATE OF NEW HAMPSHIRE
DEPT. OF TRANSPORTATION
BUREAU OF HIGHWAY MAINTENANCE

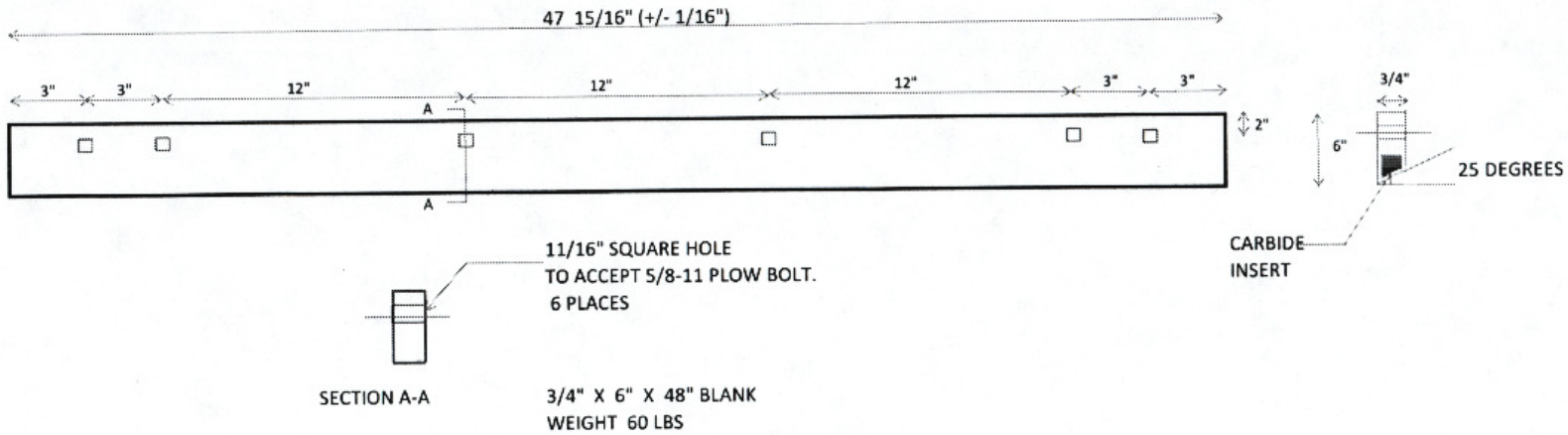

12" O/C HOLES 48"

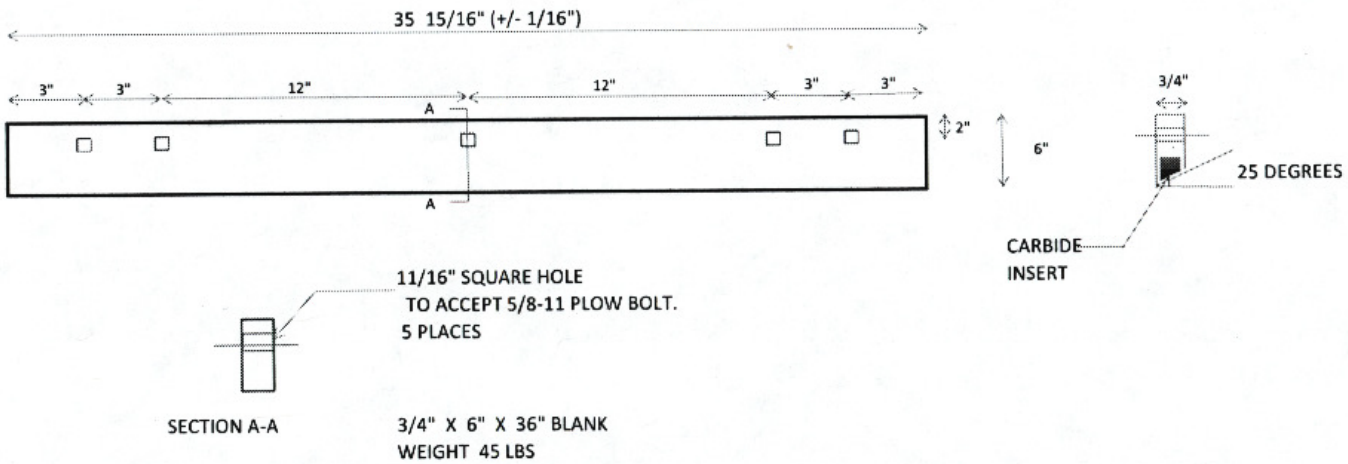

12" O/C HOLES 36"

1. Inserts and Material per specification.
2. Center of holes must be in line within 1/32" of estabished centerline.
3. CARBIDE inserts brazed on all sides. The difference between the highest and lowest tip point between adjacent inserts not to exceed 1/32" on any given assembly.
4. Limits and tolerances, unless otherwise given, not to exceed 1/16".
5. Metal stamp manufacturer name and month/year of manufacture on both ends of blade, along with blade length.

STATE OF NEW HAMSPHIRE
DEPARTMENT OF TRANSPORTATION
BUREAU OF HIGHWAY MAINTENANCE